REVISION			
REV.	DESCRIPTION	DATE	APPROVED

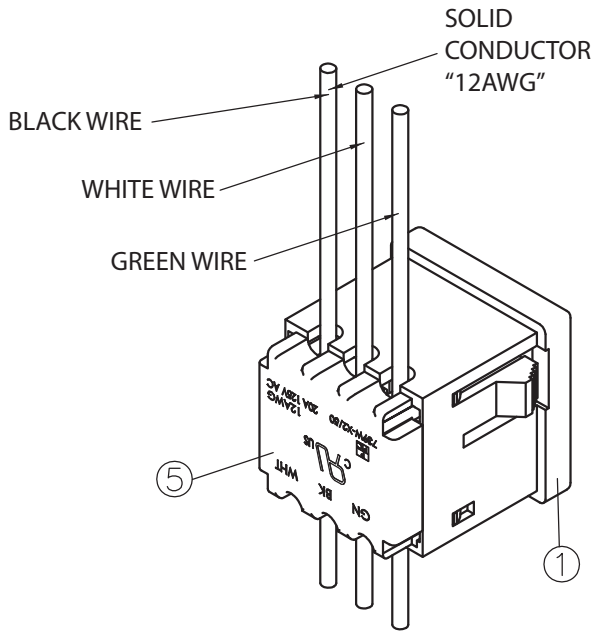

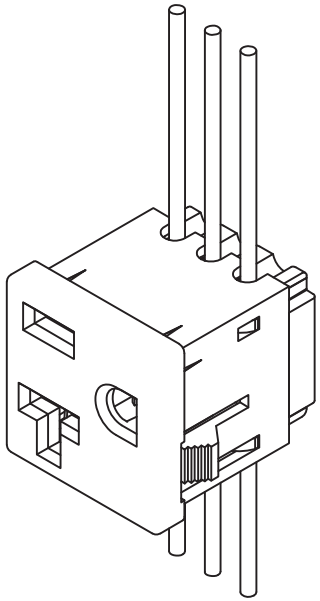

THESE DRAWINGS ARE THE PROPERTY OF QUALTEK ELECTRONICS AND NOT TO BE REPRODUCED FOR OR COMMUNICATED TO A THIRD PARTY WITHOUT THE EXPRESS WRITTEN PERMISSION OF AN OFFICER OF QUALTEK ELECTRONICS.

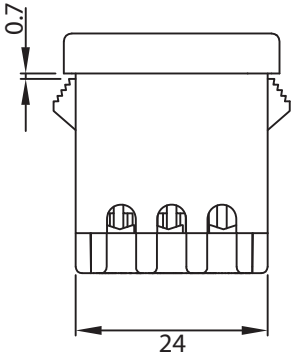

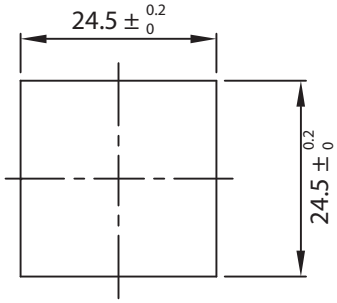

PANEL CUTOUT

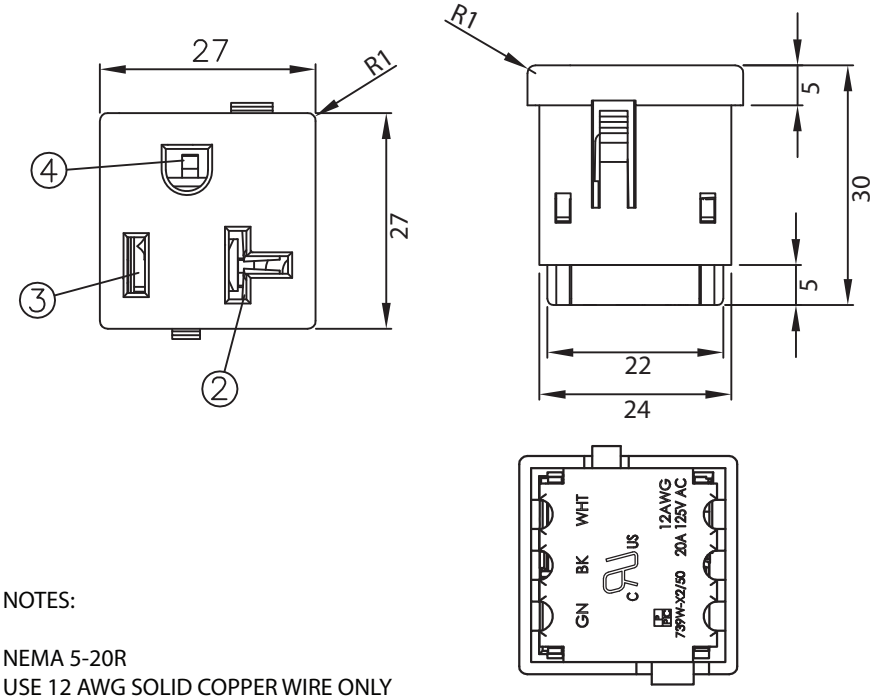

CONTROLLED

5	Cover back of the body, NYLON Black Color	1
4	Contact PIN Brass Strip t=0.7mm	1
3	Contact PIN Brass Strip t=0.7mm	1
2	Contact PIN Brass Strip t=0.7mm Ni-Plated	1
1	Body Insulator NYLON Black Color	1

Dim range (mm)	Tolerance +/- (mm)
0-1	0.30
1-6	0.30
6-18	0.30
18-50	0.50
50-120	0.70
120-250	0.90
250-500	1.20

Qualtek Electronics Corp.
PPC DIVISION

Part Number: 739W-X2/50

RoHS Compliant

Description: SNAP-IN 20 AMP T-SLOT RECEPTACLE

UNIT: mm

Drawn / Date	Checked / Date	Approved / Date
R.Nuti 12-02-15	12-02-15	LY / 12-02-15

NOTES:

NEMA 5-20R
USE 12 AWG SOLID COPPER WIRE ONLY
20A 125V
PANEL THICKNESS: 0.8~1.8mm
APPROVALS: UL,cUL
PRODUCT SHIPPED UNASSEMBLED
RoHS COMPLIANT